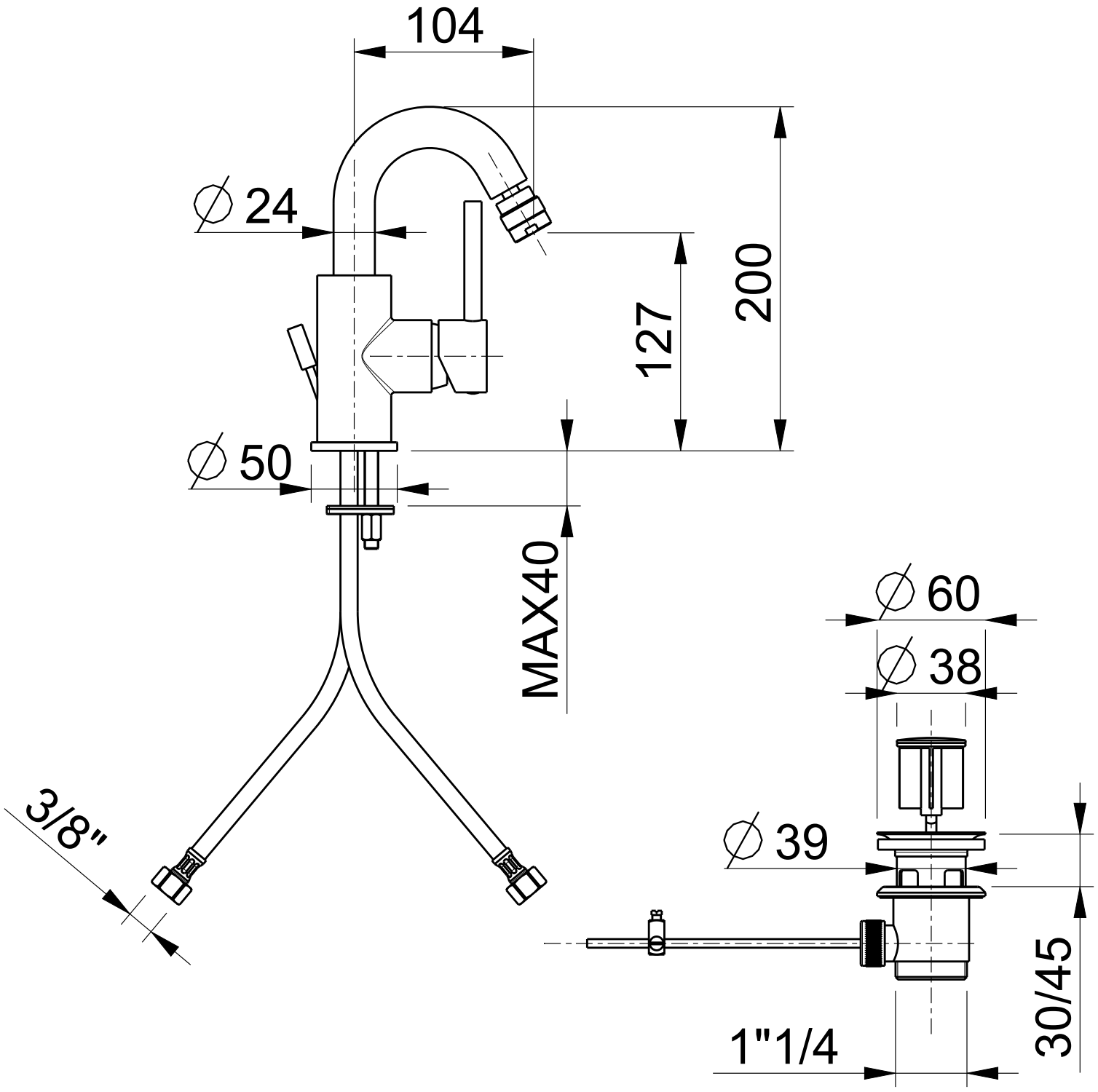
104
∅ 24
200
127
∅ 50
MAX40
3/8"
∅ 60
∅ 38
∅ 39
30/45
1"1/4